STELLARVUE ®

LIMITED WARRANTY FOR U.S.A. END PURCHASERS ONLY

Stellarvue (SV) warrants that each SV brand telescope and accessory shall be free from defects in materials and workmanship for two years from the date of purchase. SV will repair or replace such product or part thereof, which upon inspection by SV is found defective in materials or workmanship. As a condition to the obligation of SV to repair or replace such product, the product must be returned to SV as specified in this warranty.

THIS LIMITED WARRANTY, AND ANY IMPLIED WARRANTIES THAT MAY EXIST UNDER STATE LAW APPLY ONLY TO THE ORIGINAL PURCHASER AND LASTS ONLY AS LONG AS THE PURCHASER OWNS THE PRODUCT.

Return requirements:

· Proof of purchase acceptable to SV must accompany any return.

· A return authorization must be obtained from SV in advance of return.

E-mail Stellarvue at mail@stellarvue.com or call (530) 823-7796 to receive the authorization & packing instructions.

· The authorization code must be written on the outside of the container.

· All returns must be accompanied by a written note stating the model number of the product, authorization code, name, address, e-mail address and daytime telephone number of the owner, and an explanation of the problem. Replaced parts shall become the property of SV.

· The customer shall be responsible for all costs of transportation and insurance, both to and from SV.

SV Requirements

· SV shall use reasonable efforts to repair or replace any product covered by this limited warranty within thirty days of acceptance. If repair will take longer, SV shall notify the customer.

· SV may replace any product that has been discontinued with a new product of comparable value and function.

Products that have been damaged, dropped, disassembled, abused, misused, mishandled, subjected to temperature or weather extremes, subjected to wear or modified in any way will not be covered by this warranty. In these instances, this warranty shall be null and void.

THESE WARRANTIES REPLACE ALL OTHER WARRANTIES EXPRESS OR IMPLIED INCLUDING, BUT NOT LIMITED TO THE IMPLIED WARRANTIES OF MERCHANTABILITY AND FITNESS FOR A PARTICULAR PURPOSE. SV MAKES NO EXPRESS WARRANTIES BEYOND THOSE STATED HERE AND DISCLAIMS ALL OTHER WARRANTIES, EXPRESS OR IMPLIED, INCLUDING, WITHOUT LIMITATION, IMPLIED WARRANTIES OF MERCHANTABILITY, AND FITNESS FOR A PARTICULAR PURPOSE THE SOLE OBLIGATION OF SV UNDER THIS LIMITED WARRANTY SHALL BE TO REPAIR OR REPLACE THE COVERED PRODUCT, IN ACCORDANCE WITH THE TERMS SET FORTH HEREIN. SV DISCLAIMS ANY LOST PROFITS, GENERAL, SPECIAL, INDIRECT OR CONSEQUENTIAL DAMAGES WHICH MAY RESULT FROM BREACH OF ANY WARRANTY, OR ARISING OUT OF THE USE OR INABILITY TO USE ANY SV PRODUCT FOR ANY PARTICULAR PURPOSE. THIS WARRANTY GIVES YOU SPECIFIC LEGAL RIGHTS.AND YOU MAY ALSO HAVE OTHER RIGHTS THAT VARY FROM JURISDICTION TO JURISDICTION.

WARNING: LOOKING AT THE SUN CAN CAUSE SERIOUS EYE INJURY AND BLINDNESS. NEVER POINT A TELESCOPE AT OR NEAR THE SUN. VIEWING THE SUN WITHOUT A PROPER SOLAR FILTER MAY RESULT IN BLINDNESS, AS WELL AS DAMAGE TO THE INSTRUMENT. NEVER ALLOW CHILDREN TO USE BINOCULARS OR TELESCOPES DURING THE DAYLIGHT HOURS, UNLESS THEY ARE SUPERVISED BY AN ADULT WHO UNDERSTANDS THE DANGER OF POINTING ANY OPTICAL INSTRUMENT IN THE GENERAL DIRECTION OF THE SUN.

STELLARVUE ®

SVR90T-25SV RAPTOR
90 MM APO TRIPLET REFRACTOR

STELLARVUE®

WWW.STELLARVUE.COM

A Message From Vic Maris

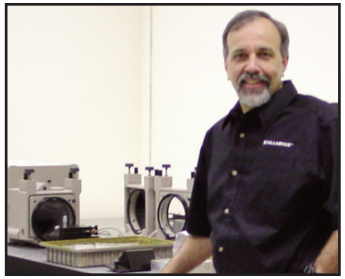

Thank you for purchasing a Stellarvue® Telescope. Back in the mid 1960's my father bought me a 60mm refractor to encourage my interest in science. That telescope almost ended my interest in astronomy altogether! With its wobbly mount, inferior eyepieces and optics, I struggled for several nights, then retired the telescope to the closet. There are millions of inexpensive telescopes sitting in closets because of their inferior performance. Instead of taking a chance, you have made a decision to become the owner of a quality telescope that is easy to use and built to last. Congratulations on making an excellent decision! Please look over this manual to learn how easy it is use your new Stellarvue® Refractor.

WARNING!

LOOKING AT THE SUN CAN CAUSE SERIOUS EYE INJURY AND BLINDNESS. NEVER POINT A TELESCOPE OR BINOCULARS AT OR NEAR THE SUN. VIEWING THE SUN WITHOUT A PROPER SOLAR FILTER MAY RESULT IN BLINDNESS, AS WELL AS DAMAGE TO THE INSTRUMENT. NEVER ALLOW CHILDREN TO USE BINOCULARS OR TELESCOPES DURING THE DAYLIGHT HOURS, UNLESS THEY ARE SUPERVISED BY AN ADULT WHO UNDERSTANDS THE DANGER OF POINTING ANY OPTICAL INSTRUMENT IN THE GENERAL DIRECTION OF THE SUN.

INTRODUCTION

Stellarvue telescopes are individually made and are triple tested before they leave the factory. Please store and use it as you would any optical device. If dust accumulates on the lens, you may use a bulb type blower to remove it. Always be careful to avoid marring the lens.

Stellarvue optics are fully multi-coated to increase light transmission and contrast. Lenses are accurately hand figured but may show some cosmetic marks which do not affect performance. The telescope is internally baffled and treated with an ultra flat black interior. The true apochromatic lens, dark interior and full multi-coatings result in exceptional contrast and clarity.

Assembling your telescope is easy. Once it is assembled, you are ready to observe. The telescope may be easily moved. We recommend storing the tube assembly in a padded, breathable case to protect the finish. Do not leave it outside after observing with it. When working in the field, it is a good idea to cover the telescope when not in use, to prevent dust from settling on the optical and mechanical parts.

CARE AND MAINTENANCE

Keep the telescope covered when not in use with the lens caps in place. Cover the lens to reduce the dust and debris that can fall onto the lens. When observing, extend the dew shield all the way out to minimize the amount of dew that forms on the lens. If the lens gets wet, bring it indoors and let it air dry before replacing the lens cap. Do not store the telescope in an air tight container. Store it in a cool, dry place.

Lens cleaning should be done very infrequently. A small amount of dust or small spots on a lens will not affect performance. If dust accumulates on the lens, blow it off with a bulb syringe. If the lens needs cleaning, make sure you blow all the dust off the lens before cleaning it. Dust particles can be hard and scratch glass. So every bit of dust should be removed before you use a lens cloth. Once the lens is clear of any particles, use lens cleaner on a Kimwipe or optical cleaning cloth to clean the lens, followed by a dry wipe. Never spray directly onto the lens as the liquid could migrate around the lens to the inside.

Spray the cloth and wipe it in circular motions covering the entire surface. Keep wiping as the lens cleaner evaporates. Use a dry cloth as needed.

The tube exterior can be cleaned with a lint free cloth and a commercial cleaner like "Fantastic." Fantastic works well on anodized surfaces and the tube to eliminate spots. As with any cleaner, follow the instructions on the container.

Should you inadvertently mar the carbon fiber tube (and if the marks do not come off with cleaner) use a good, automotive paste wax, such as Turtle Wax. Be sure to remove all wax residue once finished. Buffing it out afterward will leave a shiny finish.

Nicks in the carbon fiber tube can be treated with clear nail polish. Once again, be careful when applying it and do so only to the affected area.

Avoid temperature extremes. Do not store the telescope in a hot car during the daytime as it will get very hot. Whenever possible, store it in a cool, dry place.

Avoid dropping the telescope or striking it against hard surfaces. Treat the telescope as you would a fine camera lens and it will give you decades of excellent service.

OPTIONAL FINDERS

Since this telescope offers a wide field of view, many users find they do not need a finderscope. They merely use a wide field 2” eyepiece. But the majority of users prefer either a reflex finder (which displays an illuminated reference point) or an optical finderscope.

Red Dot Finder

The simplest to use is the Stellarvue Red Dot Finder #F1001 shown to the left. When this finder is turned on, a red dot is seen in the window. This dot represents where the telescope is pointed. This is similar to a 1X rifle scope.

We also offer a more advanced reflex finder featuring multiple reticle patterns. A lever in the rear permits the user to switch from a projected red dot (two sizes), to a circle or a crosshair pattern.

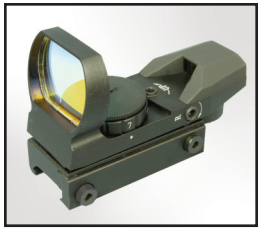

Multi-reticle Finder

Reticle patterns

STELLARVUE ® OPTICAL FINDERSCOPES

Now available in 50mm, 60mm and 80 mm clear aperture, these finderscopes have many unique and desirable features the others lack. We designed them with a 90 degree fully multicoated correct image erecting prism with 1.25” helical focuser so other 1.25” eyepieces could be used. The performance of this finderscope is stunning when used with Televue Naglers. A complete selection of Stellarvue dovetail mounting ring systems are available separately for various telescopes.

GUIDESCOPE RINGS

Astrophotographers often use a top-mounted guide scope when engaged in astrophotography. The guidescope is mounted on adjustable rings on top of the main scope so it may be pointed at a relatively bright guide star while the main telescope is centered on the target. Stellarvue makes adjustable guidescope ring systems that will work perfectly with your Stellarvue telescope.

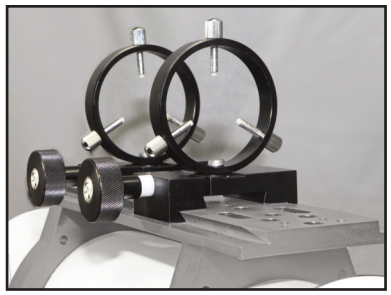

INTRODUCTION TO YOUR TELESCOPE

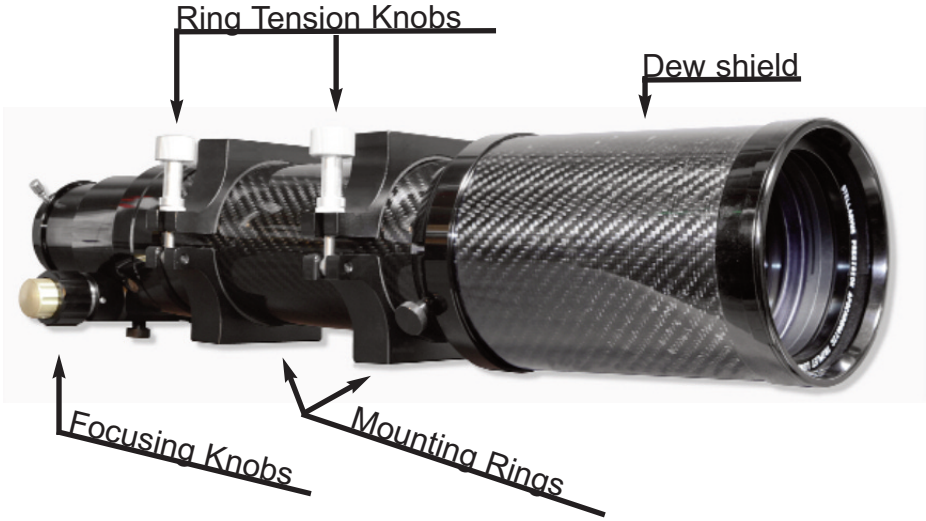

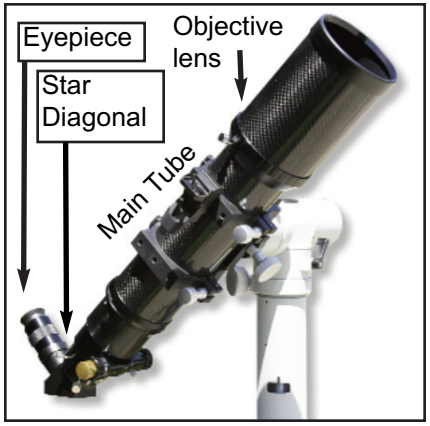

Refractor telescopes gather light with a large objective lens in the front of the telescope . This light travels through the main tube into the star diagonal and then into the eyepiece. The eyepiece magnifies the image. To view through the telescope, you look into the eyepiece.

Since the eyepiece is located at the back of the telescope which is pointed up to view the sky, a star diagonal is essential for comfortable viewing. Astronomers use mirror diagonals which are the sharpest.

A star diagonal presents an image that is upright but reversed left to right, like looking into a mirror. For daytime viewing of terrestrial objects, an erecting prism may be used instead of a star diagonal and this provides correctly oriented views just as seen with the naked eye. Heat waves during the day affect image clarity. So the loss of resolution caused by an erecting prism is minimal when the telescope is used during the day. But for the best performance at night, always use a good mirror star diagonal.

Different eyepieces provide different magnification powers. Low power eyepieces provide the widest field of view and the brightest images so use these to initially locate objects. Once the object is centered in the low power eyepiece, changing to a high power eyepiece will let you get a closer look.

MOUNTING THE TELESCOPE

Your telescope includes two hinged mounting rings. These attach to vixen compatible mounts using an optional vixen rail.

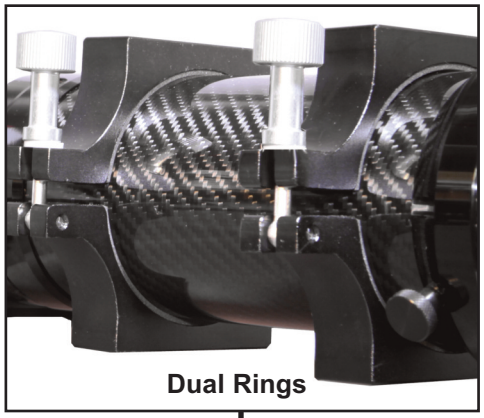

Dual Rings

TP14 Rail

The TP14 rail is our “Vixen” sized rail. This rail is used on Stellarvue mounts that use the TD65 shoe (M2 & TA Tripod), the Celestron AVX, Vixen GP, and many more.

Convert your telescope into a super telephoto lens by attaching your camera to it.

USING A SIMPLE POINT AND SHOOT CAMERA

Our micro-metric camera adapter (#CA6) is used for small point and shoot cameras.

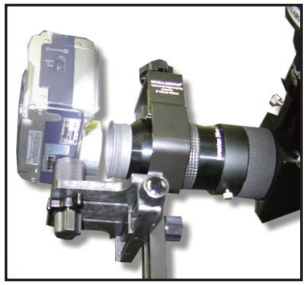

1. Insert your star diagonal and low power eyepiece into the focuser.
2. Attach the proper micro-metric camera adapter to the eyepiece as shown.
3. Center the camera lens directly over the opening in the eyepiece using the micro-metric adjustment knobs on the camera adapter.
4. Focus and shoot.

USING A DSLR CAMERA

Flattener *T ring* *Camera*

1. Purchase a t-ring for your model camera available from a camera store.
2. Remove the camera lens from your camera body.
3. Thread the t-ring to the Stellarvue field flattener.
4. Remove the 2” visual back from the focuser and thread the flattener into it.
5. Attach the camera to the t-ring/field flattener.
6. Focus and shoot.

USING A CCD CAMERA

CCD Cameras offer many advantages over DSLR’s but each camera is designed differently. Field flatteners must be placed at a specific distance from the CCD chip in your camera. Our field flatteners are designed to work with DSLR cameras fitted with a t-ring. DSLR cameras have 55 mm of space from the front of the t-ring to the chip. Unfortunately, most CCD cameras have a much shorter spacing distance. So in order to use Stellarvue field flatteners with a CCD camera, it is neccessary to use extension tubes between the field flattener and the camera. Let’s say your CCD camera has 35 mm of space from its opening to its ccd chip. In this case, a 20 mm extension will be needed to get the required 55 mm spacing from the rear of the flattener to the actual CCD chip. Extension tubes are available directly from Stellarvue.

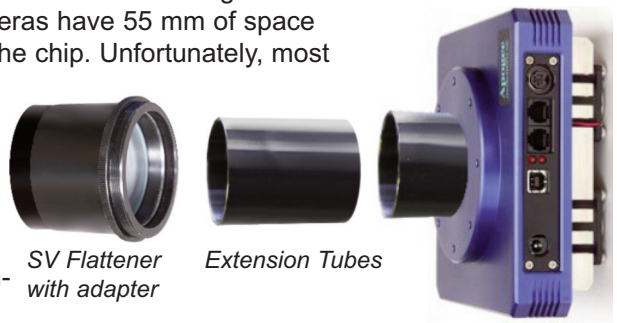

SV Flattener with adapter *Extension Tubes* *CCD Camera*

ASTROPHOTOGRAPHY

New telescope owners are urged to enjoy their new telescope visually before attempting astrophotography. While the pros make it look easy, astrophotography requires a significant commitment of time and expense. Learning the night sky and becoming completely familiar with your telescope will only help when you decide it is time to try your hand at imaging.

Stellarvue telescopes are designed for use visually and photographically. We offer simple camera adapters as well as dedicated field flatteners for use with your camera so your images are sharp across the field of view.

Good astrophotography requires a good telescope mount. Equatorial mounts are best as alt azimuth tracking mounts cause field rotation during longer exposures, turning the stars into arcs. Equatorial mounts that have low periodic error track the stars accurately if your telescope mount is properly aligned to the celestial pole. Less expensive mounts will not track accurately enough to show all your telescope is capable of capturing. Your telescope is excellent both optically and mechically, so we advise you not to cut corners on the mount if you intend to engage in astrophotography. Check our website for recommended mounts for your telescope.

CA3: The CA3 camera adapter plugs into your focuser's 2" adapter in place of the star diagonal and eyepiece. This adapter has a t-thread. DSLR cameras attach to the camera adapter using a t-ring for your model camera. This inexpensive adapter will allow you to start taking pictures through your telescope. Some cameras may require a small extension tube to reach focus.

Field Flatteners: Without a field flattener, you may notice that stars in the corners of your pictures are elongated. That is because telescopes are designed to be used visually, creating an image in your eye, not on a wider flat surface. To correct for this, we offer field flatteners that will make the stars appear as points from the center to the edge of your camera. We offer both standard and large chip field flatteners for the SVR90T refractors.

Focal reducers: Back in the old film days, astrophotographers needed to reduce the speed of their telescopes to avoid reciprocity failure. Today, many people still feel they need to reduce the speed of their telescopes even though they are now taking a series of shorter electronic images and combining them. The problem with these reducers is that they are not as sharp to the corner as 1X field flatteners and they reduce the image scale significantly. Since relatively short refractors like this one already render a wide field of view, users should think twice before ordering a focal reducer.

USING THE TELESCOPE

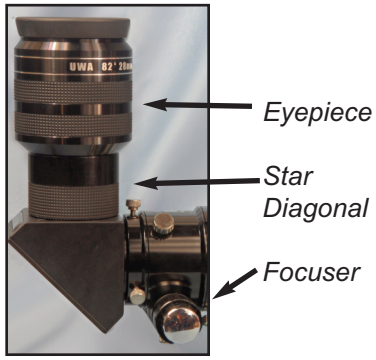

1. Place the telescope on a suitable mount and remove the front and rear covers.
2. Insert a star diagonal or erecting prism in the focuser.
3. Insert your lowest power eyepiece into the star diagonal or erecting prism.
4. Point the telescope at a distant object and look through the eyepiece.
5. Focus the image of the distant object using the focuser knobs.
6. To increase power, center the object in the low power eyepiece and then replace it with a higher power eyepiece.

FOCUSER ADJUSTMENT

If you find the focuser slips when heavy accessories are used, tighten the thumb screw (A) slightly to eliminate slippage.

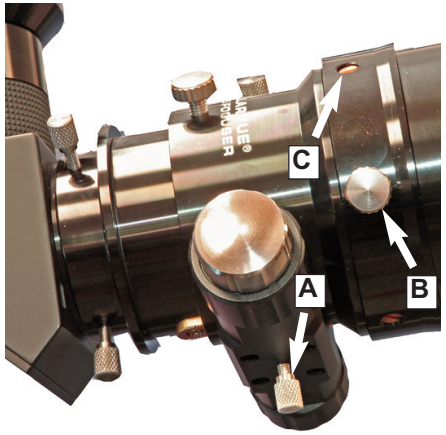

ROTATING THE FOCUSER

There is a thumb screw (B) in between the focuser and the main tube. Loosen this slightly and you may rotate the focuser 360 degrees. If you notice that the focuser is too loose when this screw is loosened, you should slightly tighten the three brass bearing screws (C) positioned around the rotator so they apply enough pressure to hold the focuser without wobbling but allow rotation.

BINOCULAR VIEWING

Some observers enjoy using binocular viewers also known as binoviewers. When using binoviewers with conventional refractors, it is necessary to use a relay lens so the eyepieces come to focus. These relay lenses are commonly referred to as an OCA or OCS. They are generally placed either in the binoviewer as shown or they are screwed to the front of the star diagonal.

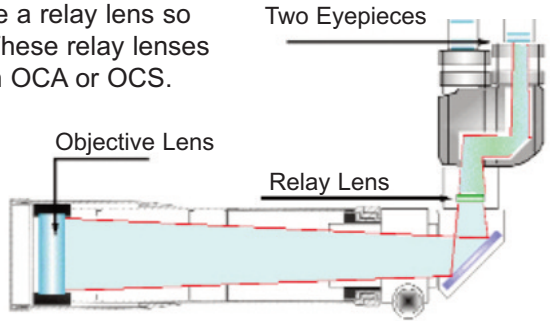

ACCESSORIES CHART

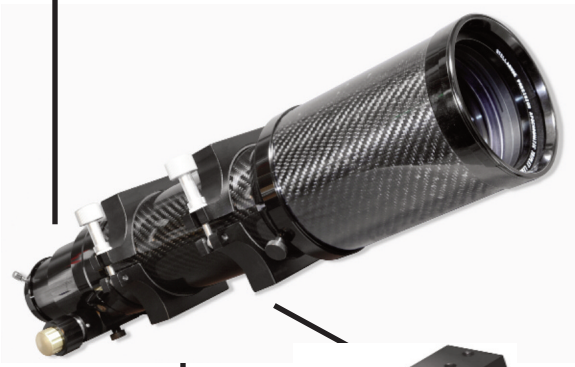

TP14

Stellarvue M2 Mount

Telegizmos
Outdoor Covers

Stellarvue M2 attached to
MEC column and TA
Tripod

Storage Case

VISUAL ACCESSORIES

2” Adapter

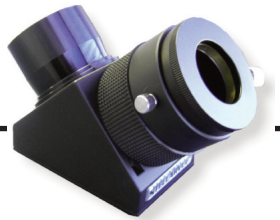

Stellarvue 2” Diagonal
or Erecting Prism

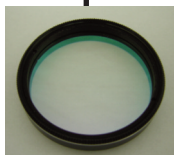

2” Filter

2” Eyepieces

1.25” Adapter

Stellarvue 1.25” Diagonal
or Erecting Prism

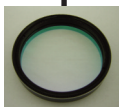

1.25” Filter

1.25” Eyepieces

IMAGING ACCESSORIES

SFF7-25 Field Flattener

Extension tubes
required for your
CCD camera

CCD Camera
using APS sized
or smaller chips

DSLR Camera
using APS sized
or smaller chips
(example: Canon
Rebel)

SFF3-25 Field Flattener

DSLR Camera
using full sized
chip (example:
Canon 5D)

Extension tubes
required for your
CCD camera

CCD Camera
using full sized
chip